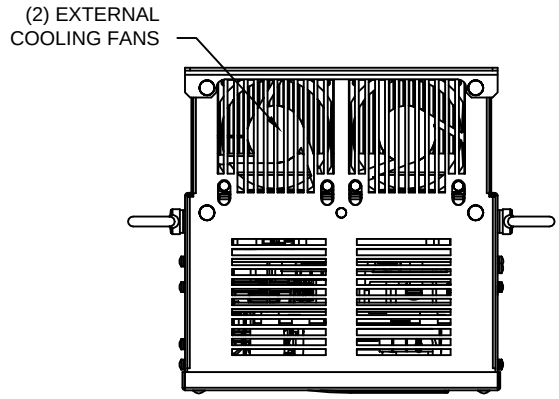

LIFTING AND EYEBOLT DETAILS

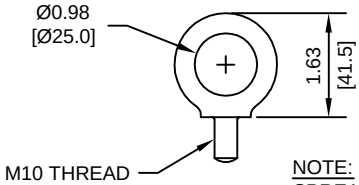

NOTE:
SPREADER BAR REQUIRED TO
AVOID DAMAGE DURING LIFTING

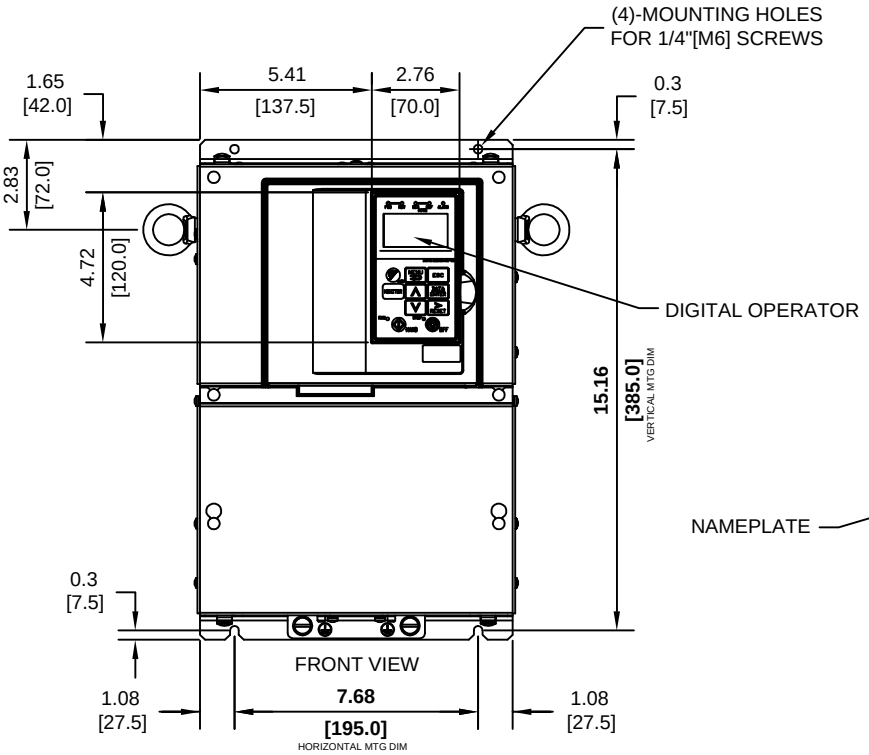

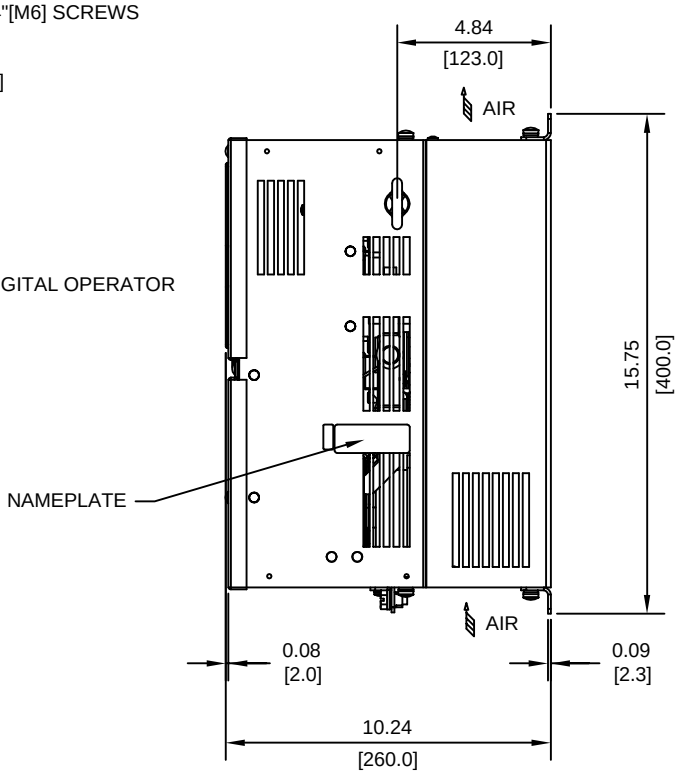

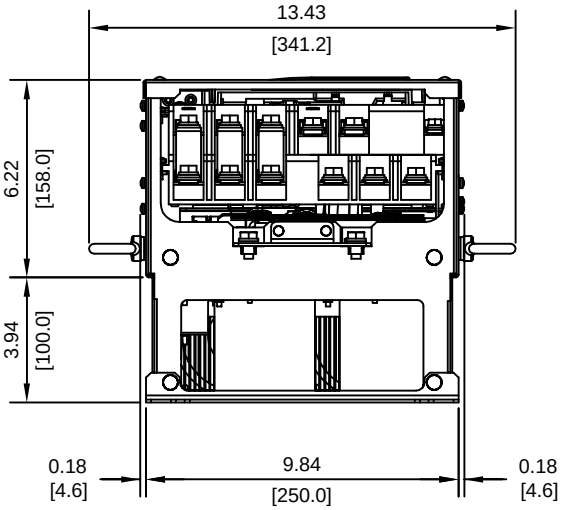

MODEL # CIMR-E7U	VOLTAGE (VAC)	OUTPUT CURRENT (A)	WEIGHT LBS (Kg)	HEAT LOSS (W)		
				INT	EXT	TOTAL
2022	208/240	88	46 (21)	252	583	835

INT=INTERNAL COMPONENTS
EXT=EXTERNAL HEATSINK

FOR ADDITIONAL DETAILS AND SPECIFICATIONS, CONSULT MANUAL

TOLERANCES/REFERENCES:		YASKAWA A World of Automation Solutions™	DRAWN: J. MATTAS	DATE 4-8-05	TITLE: E7 DIMENSION DRAWING FRAME SIZE 5 IP00 ENCLOSURE E7U2022		
-		YASKAWA ELECTRIC AMERICA, INC. Corporate Headquarters 2121 Norman Drive South Waukegan, IL 60085 1-800-YASKAWA http://www.yaskawa.com	CHECKED: M. RUCINSKI	DATE 6-5-05			
-			TECH: J. CAIRO	DATE 4-13-05	SIZE A	REVISION R00	PAGE 1 of 2
-			APPROVED: T. SASADA	DATE 6-6-05			
-			ORIGINAL DESIGN: -	DATE -	DRAWING #: DD.E7.FR5.IP00.01		
UNITS: IN[mm]	SCALE: 1:6						

TERMINAL AND WIRING DETAILS (SCALE 1:6)

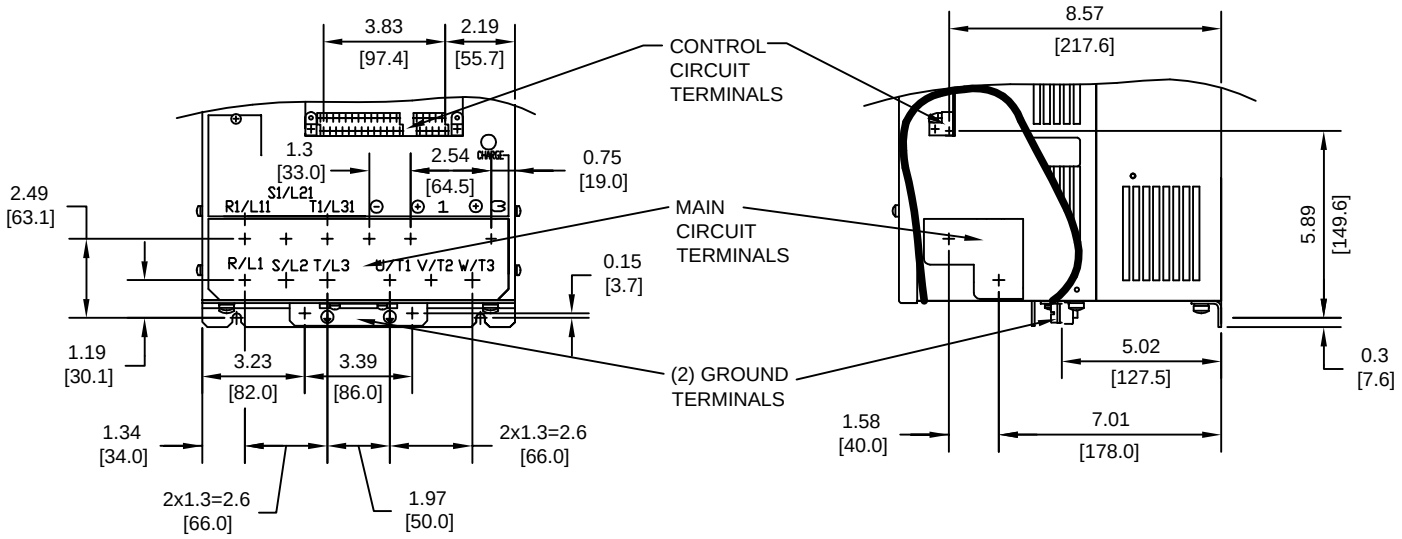

TERMINAL AND WIRE SPECIFICATIONS FOR MAIN CIRCUIT AND GROUND

MODEL # CIMR-E7U	TERMINAL SYMBOL	TERMINAL SCREW	CLAMPING TORQUE lb.in.(N.m.)	WIRE RANGE AWG(mm^2)
2022	R/L1, S/L2, T/L3, ⊖, ⊕1, R1/L11, S1/L21, T1/L31, U/T1, V/T2, W/T3,	M8	79.2 TO 88.0 (9.0 TO 10.0)	8-1/0 (8-60)
	⊕3	M6	35.2 TO 44.0 (4.0 TO 5.0)	8-4 (8-22)
	⏚	M8	79.2 TO 88.0 (9.0 TO 10.0)	SEE NOTE

NOTE: REFER TO APPLICABLE CODES FOR PROPER WIRE TYPE AND SIZE

MINIMUM INSTALLATION CLEARANCES (SCALE 1:10)

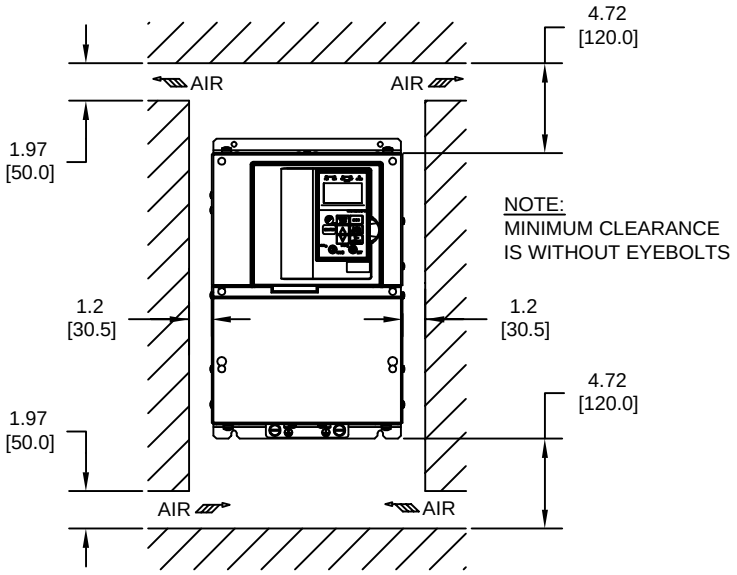

PANEL CUTOUT FOR EXTERNAL HEATSINK MOUNTING CONFIGURATION (SCALE 1:8)

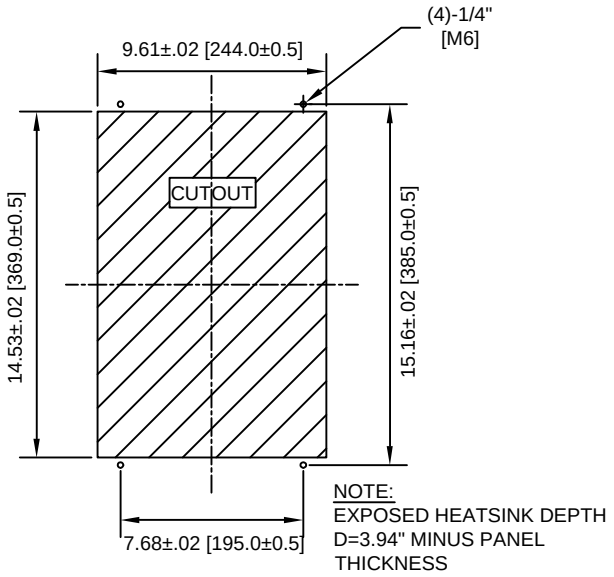

FOR ADDITIONAL DETAILS AND SPECIFICATIONS, CONSULT MANUAL

TOLERANCES/REFERENCES: - - - - - -	YASKAWA A World of Automation Solutions™	DRAWN: J. MATTAS	DATE 4-8-05	TITLE: E7 DIMENSION DRAWING FRAME SIZE 5 IP00 ENCLOSURE E7U2022
	YASKAWA ELECTRIC AMERICA, INC. Corporate Headquarters 2121 Norman Drive South Waukegan, IL 60085 1-800-YASKAWA http://www.yaskawa.com	CHECKED: M. RUCINSKI	DATE 6-5-05	SIZE A / REVISION R00 / PAGE 2 of 2
		TECH: J. CAIRO	DATE 4-13-05	
		APPROVED: T. SASADA	DATE 6-6-05	DRAWING #: DD.E7.FR5.IP00.01
UNITS: IN[mm]	SCALE: BY VIEW	ORIGINAL DESIGN: -	DATE -	